Vapor Pressures and Triple Point Temperatures for Several Pure Fluorocarbons

G. A. CROWDER,[1] Z. L. TAYLOR,[2] T. M. REED, III, and J. A. YOUNG[3]
Department of Chemical Engineering, University of Florida, Gainesville, Fla.

Ten fluorocarbons, C_3F_8, n-C_5F_{12}, 2-$CF_3C_4F_9$, n-C_6F_{14}, 2-$CF_3C_5F_{11}$, 3-$CF_3C_5F_{11}$, 2,3-$(CF_3)_2C_4F_8$, cyclo-C_5F_{10}, and cyclo-C_6F_{12}, and 1,2-$(CF_3)_2$-cyclo-C_4F_6, were purified by gas chromatography. Vapor pressure–temperature measurements were made on these compounds for pressures up to approximately 1 atm. except for the C_6F_{14} isomers for which the pressure extended up to 18 atm. The triple point temperatures of all but cyclo-C_6F_{12} were determined.

RELATIVELY little work has been done on the physical properties of highly purified samples of fluorocarbons. These substances are difficult to purify by fractional distillation because impurities in the form of fluorocarbon derivatives containing other elements, such as hydrogen, oxygen, and nitrogen, may form constant-boiling mixtures with the fluorocarbon or may boil at very nearly the same temperature. Structural isomers boil very close to one another—e.g., within a few degrees or tenths of a degree.

Data reported here were obtained on samples purified by gas chromatography as described previously (*13, 14*) and had purities approaching 100%. These purifications were done with 0.5-inch I.D. GLC of silica gel and/or n-hexadecane and/or thiourea as substrates. The sources of the fluorocarbons precluded the presence of halogen other than fluorine. Hydrogen-containing derivatives and unsaturated fluorocarbons were resolved from the perfluoroalkane analog by silica gel and by thiourea substrates. The purified compounds were distilled repeatedly in vacuum systems to eliminate the presence of any heavy impurities.

EXPERIMENTAL

Vapor pressures at temperatures below room temperature were measured on degassed samples in an apparatus constructed and operated according to that of Simons and Dunlap (*17*). For higher temperatures a conventional isoteniscope was used (*9*) up to 1 atm. At higher pressures an apparatus similar to that of Connolly and Kandalic (*4*) was used. This apparatus is shown schematically in Figure 1. The main components are a borosilicate glass piezometer (*a*), vapor jacket (*b*), mercury reservoir (*c*), mercury-oil interface detector (*d*), dead weight pressure gage (*e*), and manometer (*f*).

The dead weight pressure gage was a commercial type from the Star Martin Gauge Co. It was designed for a pressure range of 5 to 500 p.s.i.g. in intervals of 5 p.s.i. The calibration of this gage consisted of determining the cross-sectional area of the piston and the mass of the weights. The cross-sectional area of the piston was found by connecting the gage to the manometer (*f*) and measuring the rise in the mercury column when NBS calibrated weights of 100, 200, and 400 grams were added to the piston. The incremental gage weights were determined on an analytical balance to the nearest milligram. The effects of temperature and pressure on the effective cross-sectional area of the piston were neglected since the ambient temperature was constant within 3° and the operating pressures were less than 400 p.s.i. The accuracy of pressure measured by the dead weight gage was limited to 0.05% by the accuracy to which the cross-sectional area of the piston was known.

Stirring of the material in the piezometer (*a*) was accomplished with a 2-mm. steel ball located in the sample space. A 5-pound Alnico V magnet driven by a variable speed chain drive oscillated the ball at frequencies of 15 to 30 cycles per minute.

The constancy of the vapor pressure during isothermal compression from the dew point to the bubble point were determined for each sample used in the pressure piezometer of Figure 1. Samples were rejected whenever a change greater than 1 part in 500 occurred.

Melting points and freezing points were determined on degassed samples under their own vapor pressures and thus represent the triple-point temperatures. A stirrer in the freezing point compartment prevented serious undercooling of the liquids.

The e.m.f. of copper-constantan thermocouples, measured by a Type K-2 Leeds and Northrup potentiometer, indicated the temperature. The thermocouples were calibrated using the vapor pressures of CF_4 (*16*), oxygen, isooctane, and n-hexane at various points, as well as the particular points for the sublimation of carbon dioxide at 1 atm., the freezing point of mercury, and the freezing

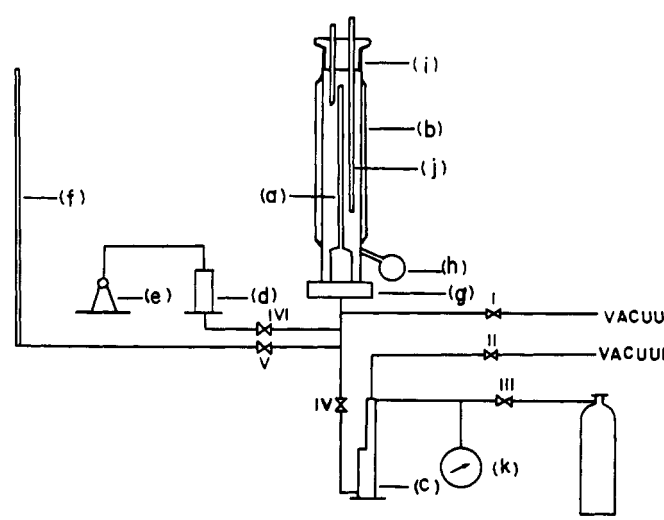

Figure 1. Compressibility apparatus

(*a*) Borosilicate glass piezometer
(*b*) Vapor jacket
(*c*) Mercury reservoir
(*d*) Mercury-oil interface detector
(*e*) Dead weight gage
(*f*) Absolute mercury monometer
(*g*) Compression block
(*h*) Liquid boiling-flask
(*i*) Joint for condenser
(*j*) Thermometer well

Present addresses: [1] Department of Chemistry, West Texas State University, Canyon, Tex.; [2] Department of Chemical Engineering, Auburn University, Auburn, Ala.; [3] Denver Research Institute, Denver, Colo.

Table I. Vapor Pressure Data—Low Pressures

Temp., °K.	Vapor Pressure, Mm. of Hg Obsd.	Calcd.	Dev., %
C_3F_8 Liquid Perfluoropropane			
181.77	24.71	24.94	−0.91
195.12	72.38	70.88	2.08
211.79	209.56	210.50	−0.45
217.74	293.95	295.90	−0.66
224.28	417.09	419.55	−0.59
229.76	546.87	551.78	−0.90
235.26	713.33	715.11	−0.25
237.34	798.62	785.74	1.61
n-C_5F_{12} Liquid Perfluoro-n-pentane			
221.17	9.28	9.37	−0.92
226.36	14.00	13.88	0.85
240.16	36.49	35.95	1.47
250.66	67.95	68.40	−0.66
259.91	113.33	114.64	−1.16
271.76	207.78	209.17	−0.67
280.70	318.64	316.41	0.70
286.13	402.17	400.74	0.36
289.75	467.09	466.35	0.16
294.25	558.38	559.54	−0.21
297.19	628.37	627.99	0.06
297.59	635.40	637.79	−0.38
302.32	764.92	763.09	0.24
303.00	783.75	782.58	0.15
2-$CF_3C_4F_9$ Liquid Perfluoro-2-methylbutane			
228.70	15.80	15.87	−0.42
235.93	26.56	26.33	0.86
253.05	76.14	76.29	−0.19
261.25	118.86	119.72	−0.72
273.59	222.54	221.83	0.32
282.81	337.47	336.96	0.15
301.84	723.52	723.11	0.06
305.28	819.23	819.67	−0.05
n-C_6F_{14} Liquid Perfluoro-n-hexane			
256.43	24.57	23.98	2.42
261.63	32.64	33.19	−1.67
267.69	46.80	47.53	−1.57
282.77	107.31	107.05	0.25
291.52	163.39	163.42	−0.02
307.07	322.34	321.54	0.25
311.24	380.83	379.89	0.25
315.68	451.87	450.86	0.22
319.37	518.16	517.37	0.15
324.85	629.88	629.89	−0.00
330.35	760.83	760.83	0.00
333.59	844.05	847.07	−0.36
2-$CF_3C_5F_{11}$ Liquid Perfluoro-2-methylpentane			
253.93	20.31	20.18	0.62
266.54	44.03	44.13	−0.23
276.49	76.30	76.84	−0.71
280.72	95.94	95.82	0.13
288.39	139.55	139.98	−0.31
293.74	178.66	179.62	−0.53
298.86	226.15	225.56	0.26
304.28	284.75	283.95	0.28
307.88	330.00	328.93	0.33
311.08	374.35	373.43	0.24
312.09	388.75	388.42	0.09
314.54	426.69	426.71	−0.00
319.37	511.19	510.71	0.09
325.43	632.86	633.44	−0.09
328.44	701.78	702.14	−0.05
332.08	791.81	792.55	−0.09
3-$CF_3C_5F_{11}$ Liquid Perfluoro-3-methylpentane			
255.15	22.45	22.66	−0.95
262.33	35.38	35.18	0.56
264.01	39.20	38.83	0.93
268.86	51.61	51.21	0.78
277.48	80.65	81.33	−0.84
282.79	106.26	106.29	−0.03
3-$CF_3C_5F_{11}$ Liquid Perfluoro-3-methylpentane			
288.55	139.79	140.17	−0.27
294.27	181.83	182.06	−0.13
300.78	241.02	241.48	−0.19
308.67	331.42	333.31	−0.57
313.66	404.00	404.36	−0.09
319.28	499.01	498.06	0.19
323.87	586.84	586.43	0.07
329.38	708.45	707.96	0.07
332.22	781.30	777.64	0.47
2,3-$(CF_3)_2C_4F_8$ Liquid Perfluoro-2,3-dimethylbutane			
262.33	32.75	32.75	−0.01
270.34	51.87	51.51	0.69
274.67	64.83	64.98	−0.24
278.16	77.61	77.89	−0.37
283.72	102.65	102.87	−0.22
288.90	131.92	131.84	0.06
293.41	162.07	162.28	−0.13
296.91	191.09	189.72	0.72
300.26	219.11	219.45	−0.16
303.97	256.50	256.72	−0.09
308.78	310.84	312.57	−0.56
313.75	379.10	380.26	−0.31
318.61	456.62	457.42	−0.17
323.30	546.11	543.33	0.51
328.38	650.89	650.41	0.07
332.63	753.45	752.29	0.15
cyclo-C_5F_{10} Liquid Perfluorocyclopentane			
285.60	516.07		
290.56	627.66		
296.83	792.94		
cyclo-C_5F_{10} Solid Perfluorocyclopentane			
229.67	19.54	19.21	1.67
251.21	79.28	81.13	−2.33
262.42	153.86	156.34	−1.61
272.80	274.50	273.54	0.35
281.17	424.58	416.74	1.85
cyclo-C_6F_{12} Liquid Perfluorocyclohexane			
350.32	1765.48	1766.90	−0.08
378.36	3585.68	3609.90	−0.67
395.00	5359.52	5244.62	2.14
410.81	7193.40	7260.90	−0.94
433.17	10854.32	11019.33	−1.52
451.01	15050.28	14894.40	1.04
cyclo-C_6F_{12} Solid Perfluorocyclohexane			
252.70	15.90	15.81	0.56
270.79	49.90	50.39	−0.98
283.92	105.79	106.30	−0.48
300.74	253.09	250.84	0.89
307.85	352.17	350.28	0.54
315.32	490.33	489.24	0.22
319.05	574.67	574.59	0.01
323.09	679.04	680.97	−0.28
325.82	758.47	761.92	−0.45
1,2-$(CF_3)_2$-cyclo-C_4F_6 Liquid Perfluoro-1,2-dimethylcyclobutane			
242.61	19.91	20.13	−1.08
248.15	29.32	28.97	1.21
257.14	50.50	50.21	0.57
264.64	76.56	76.71	−0.19
267.86	91.61	91.18	0.47
273.36	120.44	121.06	−0.52
276.98	145.20	144.78	0.29
283.31	193.66	195.20	−0.80
289.51	256.71	257.41	−0.27
299.85	394.31	395.22	−0.23
304.26	466.61	469.11	−0.54
309.06	561.48	561.24	0.04
313.93	672.33	668.27	0.60
318.01	772.40	769.30	0.40

Table II. Constants in $\log_{10} P = A - B/T - C \log_{10} T$ for Low Pressure, 0 to 760 Mm. of Hg

P in Mm. of Hg, T in °K.

Compound	A	B	C	Av. Abs. Dev. in P, %	Std. Dev., $\delta \log_{10} P$
C_3F_8	21.95566	1025.66147	5.14062	0.93	0.0058
n-C_5F_{12}	22.48319	2139.34171	5.04913	0.57	0.0025
2-$CF_3C_4F_9$	25.01222	2241.07233	5.93937	0.34	0.0009
n-C_6F_{14}	29.64521	2657.55695	7.43130	0.60	0.0039
2-$(CF_3)C_5F_{11}$	31.64184	2741.67856	8.12565	0.25	0.0022
3-$(CF_3)C_5F_{11}$	27.36382	2531.46024	6.68400	0.41	0.0007
2,3-$(CF_3)_2C_4F_8$	20.15384	2226.58948	4.19656	0.20	0.0004
cyclo-C_5F_{10}	38.55792	2756.72776	10.6659	[a]	...
cyclo-C_5F_{10}[b]	8.57905	1675.54443		1.56	0.0094
cyclo-C_6F_{12}	10.40876	1623.70714	0.99299	1.07	0.0076
cyclo-C_6F_{12}[b]	11.14554	2000.10625	0.84559	0.49	0.0029
1,2-$(CF_3)_2$-cyclo-C_4F_6	28.87383	2491.53830	7.25410	0.51	0.0009

[a] Three data. [b] Solid phase.

Table III. Vapor Pressure Data Up to the Critical Point

Temp., °K.	Vapor Pressure, Mm. of Hg Obsd.	Calcd.	Dev., %
	n-C_6F_{14} Liquid Perfluoro-n-Hexane		
256.43	24.57	23.93	2.60
261.63	32.64	33.15	−1.56
267.69	46.80	47.51	−1.52
282.77	107.31	107.07	0.22
291.52	163.39	163.49	−0.06
307.07	322.34	322.02	0.10
311.24	380.83	380.67	0.04
315.68	451.87	452.13	−0.06
319.37	518.16	519.25	−0.21
324.85	629.88	633.11	−0.51
330.35	760.83	766.18	−0.70
333.59	844.05	854.04	−1.18
332.99	849.68	838.16	1.36
341.10	1102.00	1089.67	1.12
351.85	1514.68	1507.94	0.45
374.78	2803.64	2802.21	0.05
395.56	4605.60	4584.17	0.47
415.48	6923.60	6969.77	−0.67
432.68	9724.20	9747.78	−0.24
447.08	12759.64	12726.59	0.26
	2-(CF_3)-C_5F_{11} Liquid Perfluoro-2-methylpentane		
253.93	20.31	20.13	0.88
266.54	44.03	44.11	−0.18
276.49	76.30	76.83	−0.70
280.72	95.94	95.81	0.13
288.39	139.55	139.97	−0.30
293.74	178.66	179.61	−0.53
298.86	226.15	225.62	0.24
304.28	284.75	284.13	0.22
307.88	330.00	329.26	0.23
311.08	374.35	373.97	0.10
312.09	388.75	389.02	−0.07
314.54	426.69	427.55	−0.20
319.37	511.19	512.31	−0.22
325.43	632.86	636.56	−0.58
328.44	701.78	706.41	−0.66
332.08	791.81	798.61	−0.86
333.23	843.60	830.77	1.52
351.65	1481.24	1466.94	0.97
370.65	2459.36	2454.76	0.19
417.39	6998.84	6998.33	0.01
433.13	9461.24	9478.92	−0.19
441.70	11096.76	11117.28	−0.18
447.54	12368.24	12381.18	−0.10
449.41	12875.92	12847.52	0.22
451.11	13227.04	13226.88	0.00

Temp., °K.	Vapor Pressure, Mm. of Hg Obsd.	Calcd.	Dev., %
	3-$(CF_3)C_5F_{11}$ Liquid Perfluoro-3-methylpentane		
255.15	22.45	22.65	−0.88
262.33	35.38	35.15	0.64
264.01	39.20	38.80	1.02
268.86	51.61	51.16	0.88
277.48	80.65	81.24	−0.73
282.79	106.26	106.19	0.06
288.55	139.79	140.08	−0.21
294.27	181.83	182.03	−0.11
300.78	241.02	241.64	−0.26
308.67	331.42	334.03	−0.79
313.66	404.00	405.80	−0.45
319.28	499.01	500.78	−0.35
323.87	586.84	590.66	−0.65
329.38	708.45	714.84	−0.90
332.22	781.30	786.45	−0.66
342.04	1103.52	1079.26	2.20
351.45	1453.12	1431.28	1.50
376.72	2830.24	2815.99	0.50
394.73	4279.56	4292.56	−0.30
417.05	6815.68	6853.84	−0.56
432.99	9262.88	9294.88	−0.34
448.56	12315.04	12290.45	0.20
449.78	12562.04	12547.61	0.11
	2,3-$(CF_3)_2C_4F_8$ Liquid Perfluoro-2,3-dimethylbutane		
262.33	32.75	32.38	1.14
270.34	51.87	51.34	1.03
274.67	64.83	64.97	−0.21
278.16	77.61	78.03	−0.54
283.72	102.65	103.29	−0.62
288.90	131.92	132.53	−0.46
293.41	162.07	163.21	−0.70
296.91	191.09	190.81	0.15
300.26	219.11	220.62	−0.69
303.97	256.50	257.94	−0.56
308.78	310.84	313.68	−0.91
313.75	379.10	381.02	−0.51
318.61	456.62	457.52	−0.20
323.30	546.11	542.48	0.66
328.38	650.89	647.84	0.47
332.63	753.45	747.85	0.74
341.28	999.40	988.28	1.11
351.21	1345.96	1333.24	0.95
374.63	2502.68	2506.09	−0.14
394.65	4031.80	4019.37	0.31
414.62	6013.12	6098.44	−1.42
433.22	8704.28	8722.97	−0.21
450.36	11832.44	11819.13	0.11
451.76	12132.64	12108.79	0.20
452.79	12355.32	12324.92	0.25

point of water. The calibration equations relating temperature to e.m.f. were checked with vapor pressure measurements on C_2H_6, and n-C_4H_{10}, and at the boiling point of water with a mean absolute deviation in 26 points of 0.05° C.

Pressures were read with a Gaertner precision cathetometer (0.05 mm.). Corrections for the thermal coefficients of expansion of mercury and of the meter scale, and for the local gravitational acceleration were made.

Vapor Pressures. The vapor pressure data up to 760 mm. of Hg given in Table I were fitted to the three-constant equation

$$\log_{10} P(\text{mm. of Hg}) = A - B/T - C \log_{10} T \qquad (1)$$

by least squares through a stepwise linear regression analysis (Program BMD OZR, stepwise regression, from Health Sciences Computing Facility, Dept. of Preventative Medicine and Public Health, School of Medicine, U.C.L.A., Jan. 1, 1964, revised Sept. 1, 1965).

The constants listed in Table II reproduce the data to within a few tenths of a per cent of the observed vapor pressure at the higher pressures and within 2% at the lower pressures. Standard deviations, δ, are listed for $\log_{10}P$—e.g.,

$$\delta \log_{10} P = \{\sum_n [\log_{10} P_i - (\log_{10} P_i)_{\text{calcd.}}]^2/(n-q)\}^{1/2}$$

where n is the number of observed vapor pressure values and q is the number of constants determined.

Frost and Kalkwarf (*7*) have shown that a fourth term, DP/T^2, added to Equation 1 to give

$$\log_{10} P(\text{mm. of Hg}) = A - B/T - C \log_{10} T + DP/T^2 \qquad (2)$$

covers the entire liquid range from the triple point to the critical point. The constant D is related to the critical constants, P_c, T_c, through the van der Waals equation of state by

$$D = 0.1832 T_c^2/P_c \qquad (3)$$

The high and low pressure data for the C_6F_{14} isomers are given in Table III and compared there with the calculated vapor pressures from the least square fits over the entire range by the four-constant Equation 2. The values of D obtained from the critical constants by Equation 3 are compared in Table IV with values of D from Table V. The van der Waals' D's give vapor pressures that are within a few 0.1% of the least square values. This is well within the experimental uncertainty of the pressures. The two values of D for each compound are thus essentially the same. Standard deviations are given in Table V for $\log_{10} P$ in Equation 2.

The large deviations between the observed and calculated pressures of 1 to 2% obtained from the four-constant equation in the range 700 to 1400 mm. of Hg, where the low pressure and high pressure sets of data meet, indicates that there is some inconsistency between the two sets. This is to be expected since the low pressure data were obtained with a mercury column whereas the high pressure data were obtained with a dead weight gage. The latter set of data is least precise at its lower end. The authors consider the three-constant equation to be the better one for the low pressure data in the range where the low pressure and high pressure measurements meet. For this reason, the authors have obtained the normal boiling points listed in Table VI from the three-constant Equation 1. Outside of the region near the juncture of the two sets, the deviations in the pressure for the four-constant equation is a few tenths of 1% at high pressures and essentially the same as the deviations for the three-constant equation in the lowest pressure region for these C_6F_{14} isomers.

Table IV. Comparison of D Coefficients for C_6F_{14}

Compound	Critical Constants (*19*) P_c, atm.	T_c, ° K.	D, (° K.)²/Mm. of Hg van der Waals	Least square
n-C_6F_{14}	18.1	451	2.709	2.551
2-$CF_3C_5F_{11}$	18.0	452.7	2.729	3.188
3-$CF_3C_5F_{11}$	16.7	450	2.924	2.013
2,3-$(CF_3)_2C_4F_8$	18.5	463	2.794	2.277

Table V. Constants in $\log_{10} P = A - B/T - C \log_{10} T + DP/T^2$ for C_6F_{14} Isomers, 0 to Critical Pressure
P in mm. of Hg, T in ° K.

Compound	A	B	C	D	Av. Abs. Dev., %	Std. Dev., $\delta \log_{10} P$
n-C_6F_{14}	32.94422	2788.67355	8.58925	2.55090	0.67	0.0034
2-$CF_3C_5F_{11}$	35.73684	2903.70099	9.56410	3.18830	0.38	0.0024
3-$CF_3C_5F_{11}$	28.47368	2572.10645	7.07936	2.01322	0.62	0.0026
2,3-$(CF_3)_2C_4F_8$	29.88696	2643.07932	7.56659	2.27705	0.57	0.0016

Table VI. Properties of Fluorocarbons as Liquids

Compound	This Work T.p.[a] ° K.	N.b.p.[b], ° K.	ΔH^{vap} n.b.p., cal./g. mole	ΔS^{vap} n.b.p., cal./° K. g. mole	$-B_2^c$, cc./g. mole	Literature T.p.,[a] ° K.	N.b.p.,[b] ° K.	ΔH^{vap} n.b.p., cal./g. mole
C_3F_8	124.85	236.60 ± 0.21	4752 ± 50	20.08 ± 0.2	1011 (*2*)	113 (*9*)	236.5 (*2, 10*)	4692 (*6*)
n-C_5F_{12}	148.35	302.21 ± 0.15	6320 ± 50	20.91 ± 0.2	1420 (*8*)	147.8 (*3*) 147.5 (*18*)	302.5 (*1*)	6250 (*12*)
2-$CF_3C_4F_9$	175.35	303.19 ± 0.09	6247 ± 50	20.60 ± 0.2	1420[d]	176.5 (*3*)	303.3 (*1*)	6490 (*1*)
n-C_6F_{14}	187.45	330.31 ± 0.18	6741 ± 54	20.41 ± 0.16	1800 (*19*)	186.1 (*18*) 186.9 (*5*)	330.3 (*5*) 330.4 (*18*)	6840 (*12*)
2-$CF_3C_5F_{11}$	102.45	330.81 ± 0.06	6703 ± 30	20.26 ± 0.09	1670 (*19*)		330.9(*18*)	6830 (*12*)
3-$CF_3C_5F_{11}$	157.75	331.52 ± 0.11	6702 ± 41	20.21 ± 0.12	1575 (*19*)			
2,3-$(CF_3)_2C_4F_8$	258.05	332.93 ± 0.08	6924 ± 33	20.80 ± 0.10	1580 (*19*)			
cyclo-C_5F_{10}	283.55	295.65	5762 ± 60	19.49 ± 0.1	2090[e]	283.5 (*1*)	295.7 (*3*)	6300 (*1*)
cyclo-C_6F_{12}[f]		325.85 ± 0.12					326.0 (*15*)	
1,2-$(CF_3)_2C_4F_6$	231.85	317.65 ± 0.15	6372 ± 60	20.06 ± 0.1	1500[d]			

[a] Triple point. [b] Normal boiling point. [c] Second virial coefficient at n.b.p. [d] Estimated. [e] Calculated from correlation (*11*). [f] Solid phase.

Heats and Entropies of Vaporization. The heats and entropies of vaporization at the normal boiling points (760 mm. of Hg) given in Table VI, were calculated from the three-constant vapor pressure equation by the thermodynamic relationship.

$$\Delta H^{vap} = T\Delta S^{vap} = RT^2[d\ln P/dT][1 + (B_2 - v_L)\,P/RT \qquad (4)$$

In this equation the saturated vapor volume was estimated from the virial equation of state terminated at the second virial coefficient, B_2. The saturated liquid volume, v_L, was obtained from liquid densities compiled in (*12*). Values for B_2 were obtained from the literature for C_3F_8 (*2*), n-C_5F_{12} (*8*) and the various C_6F_{14} isomers (*19*). B_2 for 2-$CF_3C_4F_9$ and for 1,2-$(CF_3)_2$-cyclo-C_4F_6 were assumed to be the same as those for the normal isomers, n-C_5F_{12} and n-C_6F_{13}, respectively. B_2 for cyclo-C_5F_{10} was estimated by Pitzer's correlation (*11*) using critical constants estimated to be 422° K. and 25.6 atm.

The uncertainties listed in Table VI for ΔH^{vap} and ΔS^{vap} were estimated from the average deviations in the vapor pressure relationship used and the expected errors in the second virial coefficients. For C_3F_8 and n-C_5F_{12}, the new values of these properties agree with the earlier values at the limits of the estimated errors. For the remaining compounds in this table, the new values of ΔH^{vap} are lower by 100 to 200 cal. per mole than those reported previously. For cyclo-C_5F_{10} the new value is smaller than the earlier value by 600 cal. per mole.

Triple Points and Boiling Points. Table VI shows that the values for the triple-point temperature in this work are in general higher than those previously reported, while the normal boiling points are, within the experimental error, in essential agreement with earlier work for most of the compounds. The higher triple points particularly that for C_3F_8 which is 11.9° above the previously reported value, reflects the high purity of the samples used.

The estimated errors in the normal boiling points given in Table VI were obtained from the average deviations and the value of $d\ln P/dT$ at the boiling point for the three-constant Equation 1.

LITERATURE CITED

(1) Barber, E.J., Cady, G.H., *J. Phys. Chem.* **60**, 504 (1956).
(2) Brown, J.A., J. CHEM. ENG. DATA **8**, 106 (1963).
(3) Burger, L.L., Cady, G.H., *J. Am. Chem. Soc.* **73**, 4243 (1951).
(4) Connolly, J.F., Kandalic, G.A., *Phys. Fluids* **3**, 463 (1960).
(5) Dunlap, R.D., *J. Am. Chem. Soc.* **80**, 83 (1958).
(6) Fang, F., Joffe, J., J. CHEM. ENG. DATA **11**, 376 (1966).
(7) Frost, A.A., Kalkwarf, D.R., *J. Chem. Phys.* **21**, 264 (1953).
(8) Garner, M.D.G., McCoubrey, J.C., *Trans. Faraday Soc.* **55**, 1524 (1959).
(9) Hala, E., Pick, J., Fried, V., Vilim, O., "Vapor-Liquid Equilibrium," p. 239, Pergamon Press, 1954.
(10) The Matheson Co., Inc., "Matheson Gas Data Book," 1961.
(11) Pitzer, K.S., Curl, R.F., *J. Am. Chem. Soc.* **79**, 2369 (1957).
(12) Reed, T.M., "Fluorine Chemistry," Vol. **5**, Chapter 2, J. H. Simons, Ed., Academic Press, New York, 1963.
(13) Reed, T.M., *J. Chromatog.* **9**, 419 (1962).
(14) Reed, T.M., Walter, J.F., Cecil, R.R., Dresdner, R.D., *Ind. Eng. Chem.* **51**, 271 (1959).
(15) Rowlinson, J.S., Thacker, R., *Trans. Faraday Soc.* **53**, 1 (1957).
(16) Ruff, O., *Angew. Chem.* **46**, 739 (1933).
(17) Simons, J.H., Dunlap, R.D., *J. Chem. Phys.* **18**, 335 (1950).
(18) Stiles, V.E., Cady, G.H., *J. Am. Chem. Soc.* **74**, 3771 (1952).
(19) Taylor, Z.L., Ph.D. dissertation, University of Florida, Gainesville, Fla., 1965.

RECEIVED for review October 14, 1966. Accepted June 14, 1967.

Isothermal Vapor-Liquid Equilibrium Data for the System *n*-Heptane–*n*-Valeric Acid at 50°, 75°, and 100° C.

STANLEY J. LODL[1] and WILLIAM A. SCHELLER
The University of Nebraska, Lincoln, Neb.

Isothermal equilibrium vapor and liquid composition measurements have been made for the *n*-heptane–*n*-valeric acid system at 50°, 75°, and 100° C. Liquid phase activity coefficients for the *n*-heptane were calculated from the equilibrium data. The *n*-valeric acid activity coefficients could not be calculated directly from the composition data because the acid dimerizes in the vapor phase, but they were calculated from the *n*-heptane coefficients by integrating the Gibbs-Duhem equation. Composition–specific volume data were also obtained for this system at 25° C.

SOLUTIONS of carboxylic acids and paraffins exhibit a high degree of nonideality, not only in the liquid phase, but also in the vapor phase at low pressures. A review of the literature indicates that no vapor-liquid equilibrium data have been published for the *n*-heptane–*n*-valeric acid system. Isothermal equilibrium pressure and composition data have been obtained with the aid of a vapor recirculation still at 50°, 75°, and 100° C.

[1] Present address: E. I. Dupont Co., Old Hickory, Tenn.

The nonideal vapor phase behavior of the system complicates the calculation of liquid phase activity coefficients from the vapor-liquid equilibrium data. If one is willing to forgo a thermodynamic consistency check of the experimental data, it is possible to calculate the liquid phase activity coefficients from equilibrium data and the Gibbs-Duhem equation. This method was used to calculate activity coefficients for the *n*-heptane and the *n*-valeric acid.